0 600 842 503
Stand ~~99-12~~
Issue 00-03-22

Fig./Abb. 1

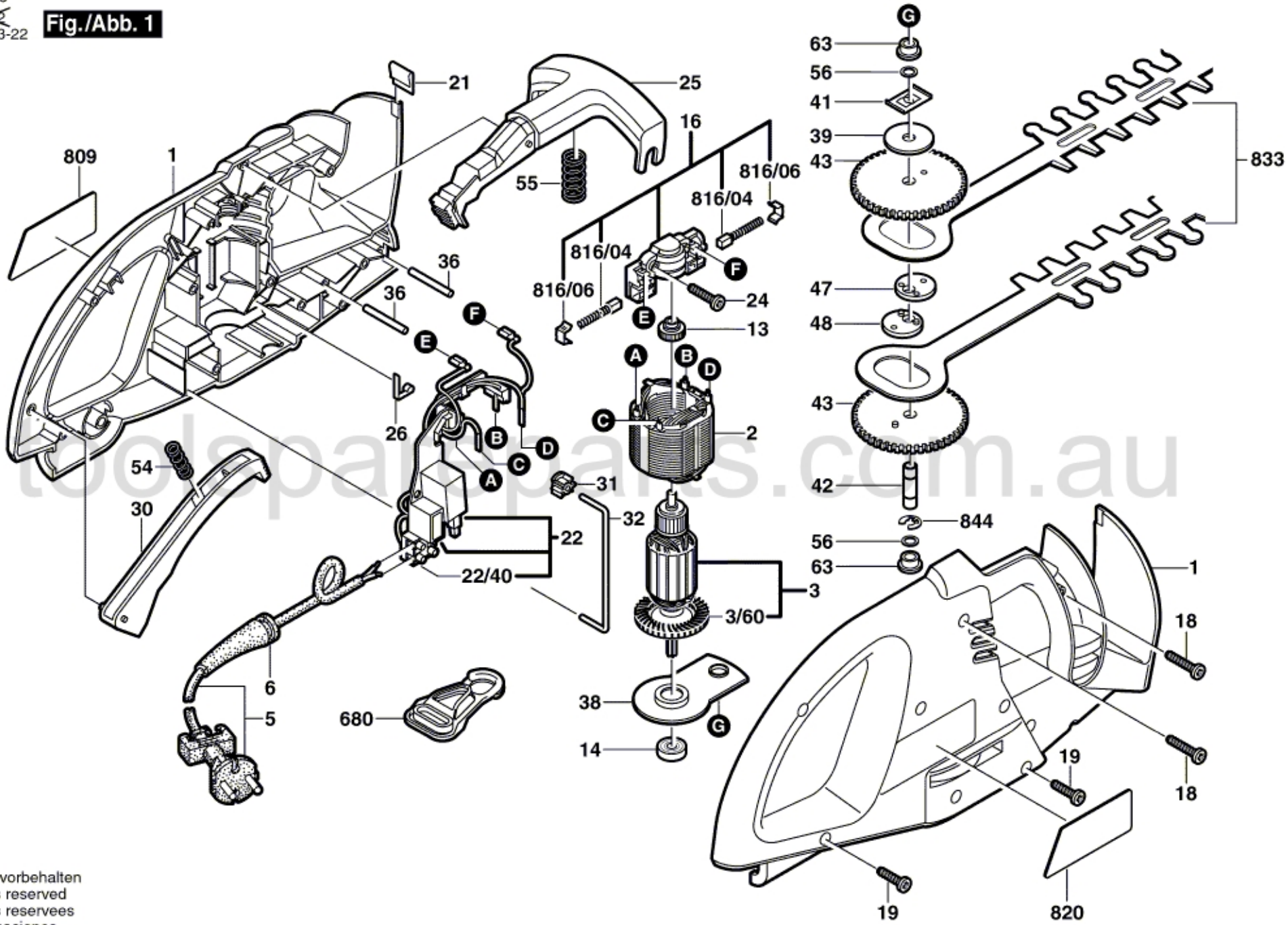

toolspareparts.com.au

Änderungen vorbehalten
Modifications reserved
Modifications reservees
Salvo modificaciones